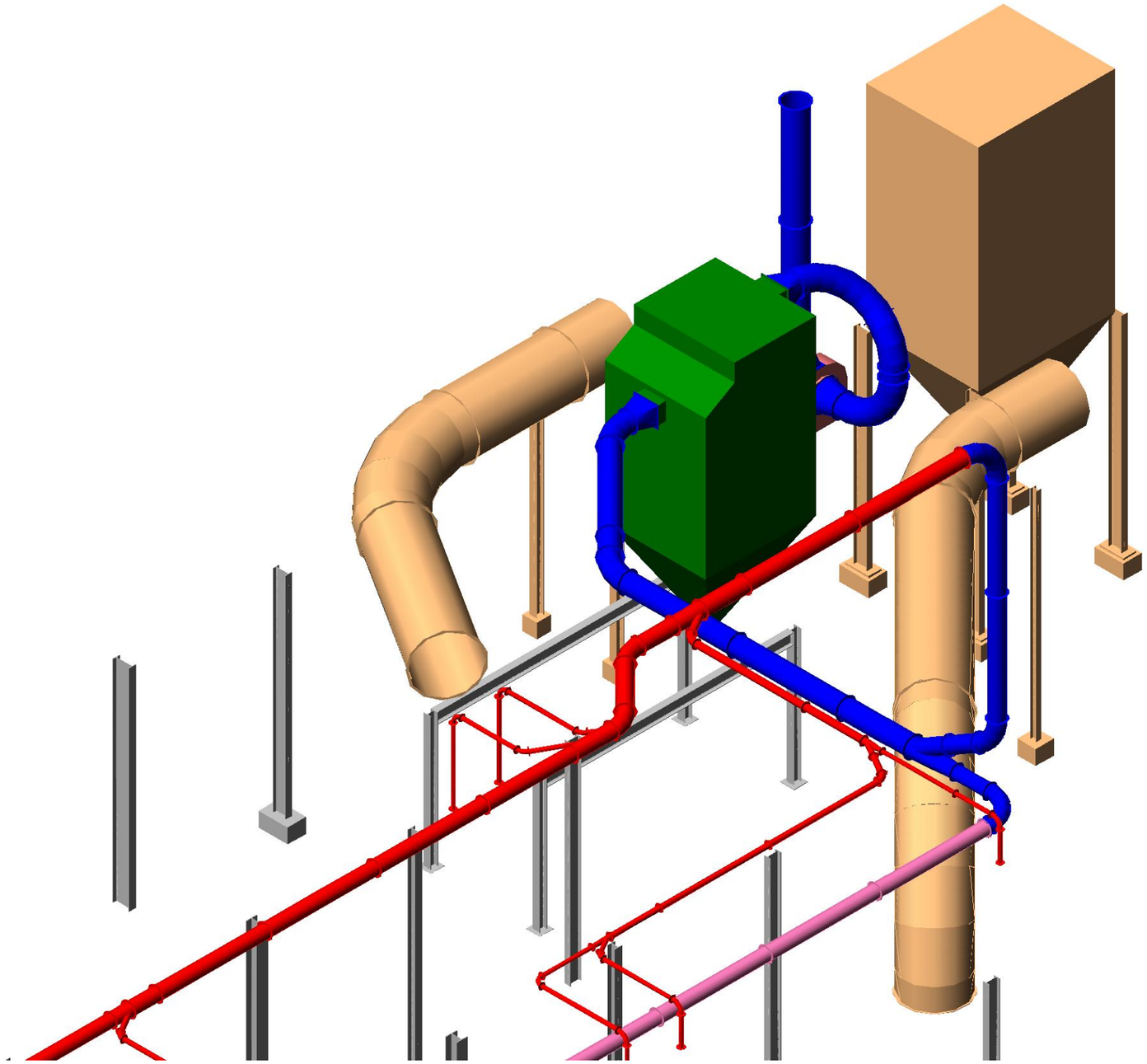

This drawing and all the information thereon remains the property of Iluka Resources Limited and shall be returned on demand. It is issued on the condition that, except with written permission, it must not be reproduced, copied or communicated to any other party, nor to be used for any other purpose than that stated on the particular enquiry, order, or contract with which it was issued. Acceptance of this drawing signifies acceptance of the above conditions and copyright.

DRAWING No.	TITLE
–	–
–	–
–	– –
–	–
–	–
–	–
–	–
–	–
–	–

REFERENCE DRAWINGS

No.		BY	DATE	CHK	DATE	APP	DATE
–	–	–	–	–	–	–	–
–	–	–	–	–	–	–	– –
–	–	–	–	–	–	–	–
–	–	–	–	–	–	–	–
–	– –	–	–	–	–	– –	
–	–	– –	–	–	–	–	–
–	–	–	–	–	–	–	–
–	–	–	–	–	–	–	–
–	–	–	–	–	–	–	–

DRAWING REVISIONS

SIGNED APPROVAL

ENG	–	–
DRN	–	–
CHK	–	–
APP	–	–

ORIGINAL DRG SIZE A1

ILUKA

–

–
–
–
–

SCALE	PLANT STRUCTURE	DRAWING NUMBER	REVISION
–	–	–	–