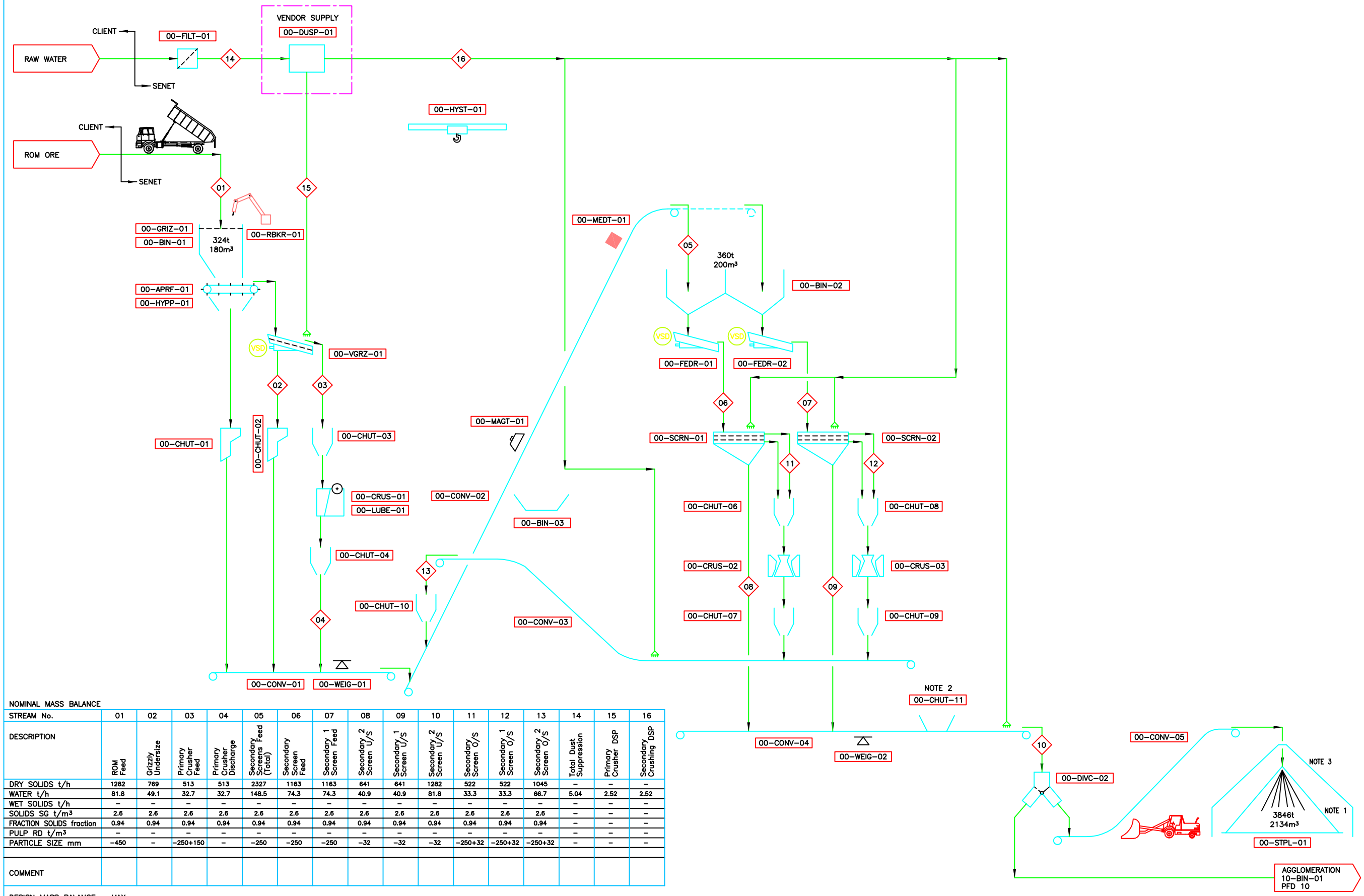

EQUIPMENT LIST

No.	EQUIP. No.	DESCRIPTION	kW
01	00-GRIZ-01	ROM ORE STATIC GRIZZLY	–
02	00-BIN-01	ROM BIN	–
03	00-APRF-01	ROM APRON FEEDER	–
04	00-HYPP-01	APRON FEEDER HYDRAULIC POWER PACK	18.5
05	00-VGRIZ-01	ROM ORE VIBRATING GRIZZLY	5.6
06	00-CHUT-01	APRON FEEDER DRIBBLINGS CHUTE	–
07	00-CHUT-02	VIBRATING GRIZZLY U/S CHUTE	–
08	00-CHUT-03	VIBRATING GRIZZLY O/S CHUTE	–
09	00-CRUS-01	JAW CRUSHER (PRIMARY CRUSHER)	110
10	00-LUBE-01	JAW CRUSHER LUBRICATION SYSTEM	–
11	00-CHUT-04	JAW CRUSHER DISCHARGE CHUTE	–
12	00-CONV-01	JAW CRUSHER DISCHARGE CONVEYOR	–
13	00-MEDT-01	PRIMARY CRUSHING METAL DETECTOR	–
14	00-BIN-03	PRIMARY CRUSHING SCRAP METAL TELECON	–
15	00-WEIG-01	PRIMARY CRUSHING WEIGHTOMETER	–
16	00-BIN-02	SCREENS FEED BIN	–
17	00-FEDR-01	SECONDARY SCREEN VIBRATING FEEDER No.1	18.5
18	00-FEDR-02	SECONDARY SCREEN VIBRATING FEEDER No.2	18.5
19	00-SCRN-01	SECONDARY SCREEN No.1	22
20	00-SCRN-02	SECONDARY SCREEN No.2	22
21	00-CHUT-06	SCREEN No.1 O/S CHUTE	–
22	00-CRUS-02	CRUSHER No.2 (SECONDARY CRUSHER)	321
23	00-CHUT-07	CRUSHER No.2 DISCHARGE CHUTE	–
24	00-CHUT-08	SCREEN No.2 O/S CHUTE	–
25	00-CRUS-03	CRUSHER No.3 (SECONDARY CRUSHER)	321
26	00-CHUT-09	CRUSHER No.2 DISCHARGE CHUTE	–
27	00-MAGT-01	PRIMARY CRUSHER BELT MAGNET	–
28	00-CONV-03	CONE CRUSHERS DISCHARGE CONVEYOR	–
29	00-CHUT-10	CONVEYOR 2 TRANSFER CHUTE	–
30	00-CONV-04	CRUSHER PLANT PRODUCT CONVEYOR	–
31	00-WEIG-02	CRUSHER PLANT PRODUCT WEIGHTOMETER	–
32	00-DIVC-02	CRUSHER PLANT PRODUCT DIVERTER CHUTE	–
33	00-CONV-05	FINE ORE STOCKPILE FEED CONVEYOR	–
34	00-STPL-01	FINE ORE STOCKPILE	–
35	00-FILT-01	DUST SUPPRESSION FILTER	–
36	00-DUSP-01	CRUSHING DUST SUPPRESSION UNIT	4.0
37	00-CHUT-11	EMERGENCY FEED CHUTE	–
38	00-HYST-01	CRUSHER MAINTENANCE HOIST	10.5
39	00-CONV-02	SEC. SCREEN FEED BIN CONVEYOR	–

OLD No.	NEW No.
00-CONV-04	00-CONV-03
00-CONV-05	00-CONV-04

NOTES:

1. RECLAIM METHOD TO BE ADVICED BY THE CLIENT.
2. EMERGENCY FEED CHUTE.
3. COVERED STOCKPILE.

LEGEND

- BATTERY LIMIT
- VSD VARIABLE SPEED
- BYPASS/ALTERNATIVE
- BY HAND/HOIST/FORKLIFT
- VENDOR PACKAGE

NOMINAL MASS BALANCE

STREAM No.	01	02	03	04	05	06	07	08	09	10	11	12	13	14	15	16
DESCRIPTION	ROM Feed	Grizzly Undersize	Primary Crusher Feed	Primary Crusher Discharge	Secondary Screens Feed (Total)	Secondary Screen Feed	Secondary 1 Screen Feed	Secondary 2 Screen U/S	Secondary 1 Screen U/S	Secondary 2 Screen U/S	Secondary Screen O/S	Secondary 1 Screen O/S	Secondary 2 Screen O/S	Total Dust Suppression	Primary Crusher DSP	Secondary Crushing DSP
DRY SOLIDS t/h	1282	769	513	513	2327	1163	1163	641	641	1282	522	522	1045	–	–	–
WATER t/h	81.8	49.1	32.7	32.7	148.5	74.3	74.3	40.9	40.9	81.8	33.3	33.3	66.7	5.04	2.52	2.52
WET SOLIDS t/h	–	–	–	–	–	–	–	–	–	–	–	–	–	–	–	–
SOLIDS SG t/m³	2.6	2.6	2.6	2.6	2.6	2.6	2.6	2.6	2.6	2.6	2.6	2.6	2.6	–	–	–
FRACTION SOLIDS fraction	0.94	0.94	0.94	0.94	0.94	0.94	0.94	0.94	0.94	0.94	0.94	0.94	0.94	–	–	–
PULP RD t/m³	–	–	–	–	–	–	–	–	–	–	–	–	–	–	–	–
PARTICLE SIZE mm	–450	–	–250+150	–	–250	–250	–250	–32	–32	–32	–250+32	–250+32	–250+32	–	–	–
COMMENT																

DESIGN MASS BALANCE – MAX

STREAM No.	01	02	03	04	05	06	07	08	09	10	11	12	13	14	15	16
DESCRIPTION	ROM Feed	Grizzly Undersize	Primary Crusher Feed	Primary Crusher Discharge	Secondary Screens Feed (Total)	Secondary Screen Feed	Secondary 1 Screen Feed	Secondary 2 Screen U/S	Secondary 1 Screen U/S	Secondary 2 Screen U/S	Secondary Screen O/S	Secondary 1 Screen O/S	Secondary 2 Screen O/S	Dust Suppression	Primary Crusher DSP	Secondary Crushing DSP
DRY SOLIDS t/h	1346	808	538	538	2443	1222	1222	673	673	1346	549	549	1097	–	–	–
WATER t/h	85.9	51.6	34.4	34.4	156.0	78.0	78.0	43.0	43.0	85.9	35.0	35.0	70.0	5.04	2.52	2.52
WET SOLIDS t/h	–	–	–	–	–	–	–	–	–	–	–	–	–	–	–	–
SOLIDS SG t/m³	2.6	2.6	2.6	2.6	2.6	2.6	2.6	2.6	2.6	2.6	2.6	2.6	2.6	–	–	–
FRACTION SOLIDS fraction	0.94	0.94	0.94	0.94	0.94	0.94	0.94	0.94	0.94	0.94	0.94	0.94	0.94	–	–	–
PULP RD t/m³	–	–	–	–	–	–	–	–	–	–	–	–	–	–	–	–
PARTICLE SIZE mm	–450	–	–250+150	–	–250	–250	–250	–32	–32	–32	–250+32	–250+32	–250+32	–	–	–
COMMENT																

Latest revised plot date: 24/10/07

REV	DATE	DESCRIPTION	BY	CHKD	APPR
E	24.10.07	GENERAL UPDATE	N.N	G.G	
D	04.10.07	GENERAL UPDATE	Z.S.	G.G	
C	19.09.07	TONNAGE ADDED & UPDATED	Z.S.	G.G	
B	11.09.07	GENERAL UPDATE	Z.S.	G.G	
A	29.08.07	ISSUED FOR CLIENT COMMENTS	Z.S.	G.G.	

REVISIONS

THIS DRAWING IS COPYRIGHT IN TERMS OF THE COPYRIGHT ACT.

CLIENT		
PROJ MANAGER		
D.O. MANAGER		
PROCESS ENG.	G.Geldenhuys	29.08.07
SECT LEADER		
CHECKED		
DRAWN	Z.Smit	29.08.07
APPROVAL	SIGNATURE	DATE

SENET
1 ST Floor Accsys Centre
157 Van Riebeeck Avenue
Edenvale
1610
Tel: 2711 609 2143
Fax: 2711 452 1130
Email: DrawingOffice@senet.co.za

DAREHZARE COPPER MINE - IRAN

CRUSHING

PROCESS FLOW DIAGRAM

A1	SCALE	JOB NO	DRAWING NO	REVISION
	NTS	SP336	PFD 00	E